Guide ribaltabili standard - *Standard flip-down guides*

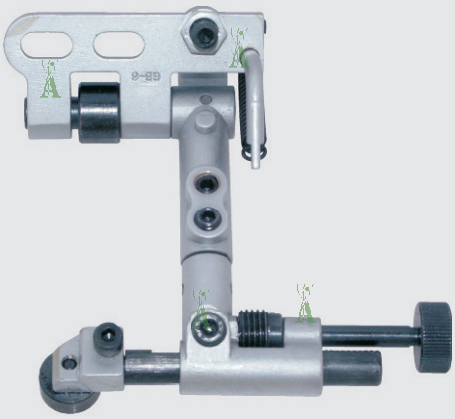

cod. **6764/GB**
- guida standard, innesto tondo
- standard guide with round clutch

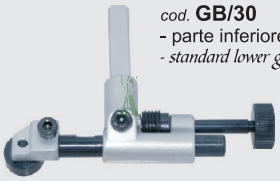

cod. **GB/30**
- parte inferiore standard
- standard lower gauge

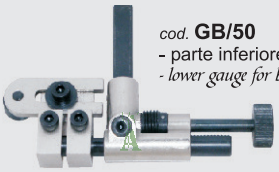

cod. **GB/50**
- parte inferiore portabordatori
- lower gauge for binders

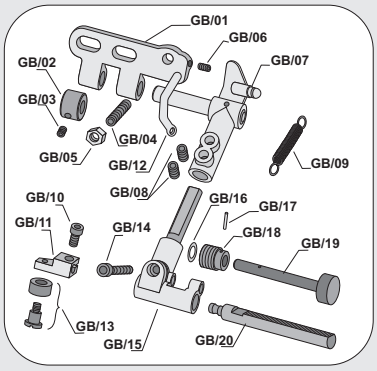

cod. **GB/68**
- guida a rullo
- roller guide

cod. **GB/70**
- guida dritta fissa
- straight guide

cod. **GB/72**
- guida dritta orient.
- slanting straight guide

cod. **GB/80**
- guida x cerniere
- zipper guide

cod. **GB/82**
- guida reg. x cerniere
- adjustable zipper guide

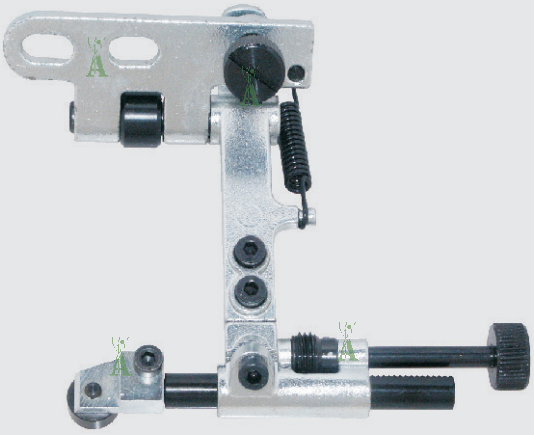

cod. **6764/NM**
- guida standard, innesto a forcella
- standard guide with fork clutch

cod. **6764/10**
- parte inferiore standard
- standard lower gauge

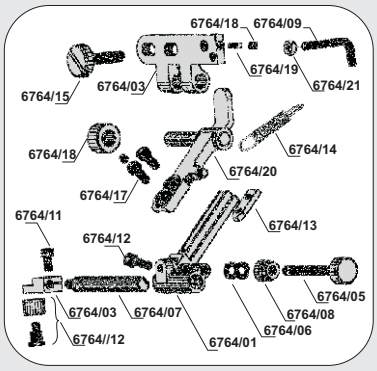

cod. **6764/04**
- a rullo
- roller guide

cod. **6764/DO**
- per cerniere
- zipper guide

cod. **6764/D5**
- reg. per cerniere
- adjustable zipper guide

cod. **6764/D2**
- dritta orientabile
- slanting straight guide

cod. **6764/OD**
- dritta fissa
- straight guide

cod. **6764/S1**
- per macchine a colonna
- postbed machines guide

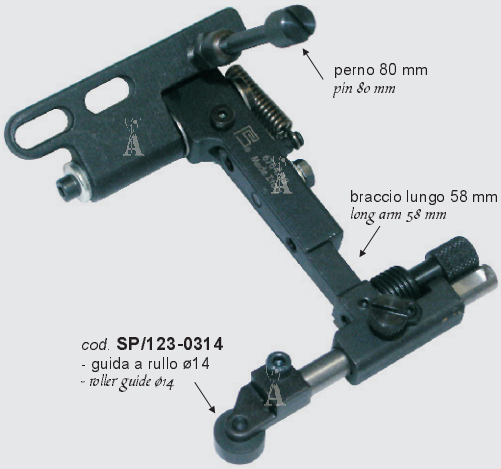

cod. **SP/123-0314**
- guida a rullo ø14
- roller guide ø14

cod. **SP/123L**
- guida lunga, innesto quadro
- long arm guide with square clutch

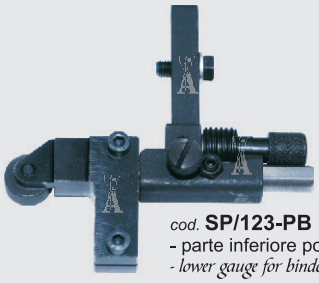

cod. **SP/123-PB**
- parte inferiore portabordatori
- lower gauge for binders

- guida a rullo
- roller guide
cod. **SP/123-0208** ø8
cod. **SP/123-0212** ø12
cod. **SP/123-0314** ø14

cod. **SP/123-0701**
- guida cerniere (5-6 mm)
- zipper guide (5-6 mm)

cod. **SP/123-0410**
- dritta (mm 4x 10h)
- straight (mm 4x 10h)

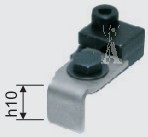

cod. **SP/123-1010**
- dritta (mm 10x 10h)
- straight (mm 10x 10h)

cod. **SP/123-2810**
- dritta (mm 28x 10h)
- straight (mm 28x 10h)

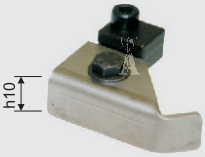

cod. **SP/123-4010**
- dritta (mm 40x 10h)
- straight (mm 40x 10h)

Altre misure a richiesta. Le guide dritte sono fornibili anche h13 mm
Other sizes on request . The straight guides are also available h13 mm