Guide profilo
(Piping attachments)

MF®

F1025 GUIDA PER INSERIMENTO PROFILO PREFABBRICATO

Per macchine piane
For flat bed machines

Lavoro Finito *(finished work)*

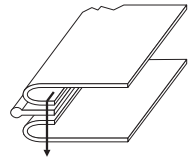

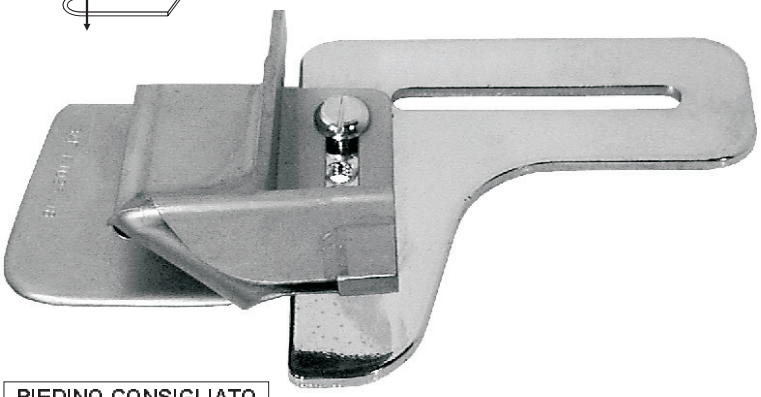

PIEDINO CONSIGLIATO
SUGGESTED FOOT

G36069HL - per tutte le misure
(for all sizes)

READY-MADE PIPING ATTACHMENT

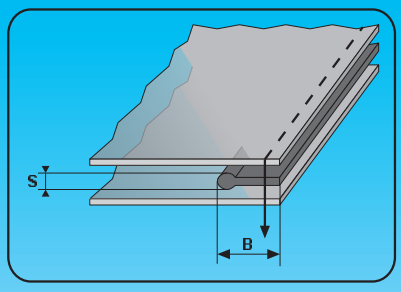

Codice	Mis. profilo (B) (piping size) (mm)	(inch)	Spessore (S) (thickness)	
F1025/8	8	5/16	M	
F1025/8H	8	5/16	H	
F1025/10	10	25/64	M	
F1025/10H	10	25/64	H	
F1025/12	12	15/32	M	
F1025/12H	12	15/32	H	
F1025/15	15	5/8	M	
F1025/15H	15	5/8	H	
F1025/18	18	23/32	M	
F1025/18H	18	23/32	H	
F1025/20	20	25/32	M	
F1025/20H	20	25/32	H	

F1030 GUIDA PER INSERIMENTO BANDA PREFABBRICATA

Per macchine piane
For flat bed machines

Lavoro Finito *(finished work)*

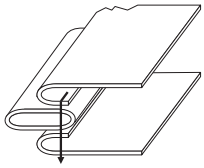

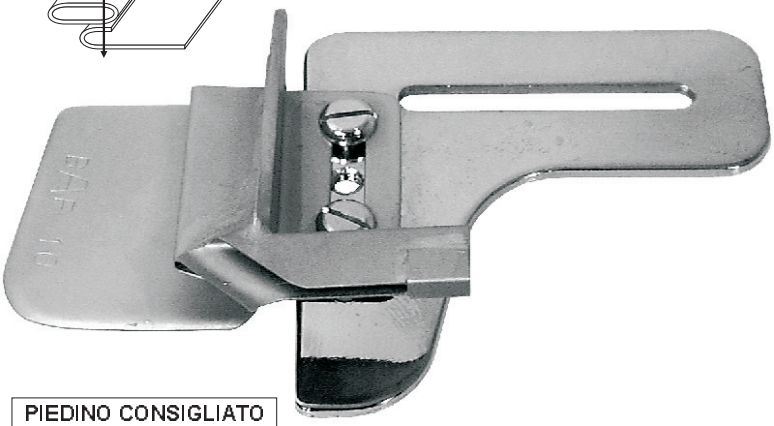

PIEDINO CONSIGLIATO
SUGGESTED FOOT

G2360A - per tutte le misure
(for all sizes)

READY-MADE EDGING ATTACHMENT

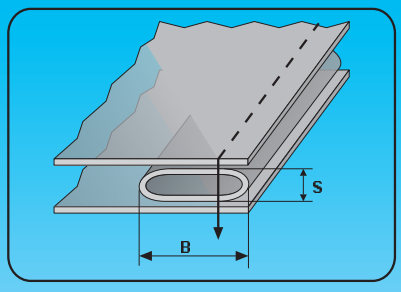

Codice	Mis. banda (B) (edging size) (mm)	(inch)	Spessore (S) (thickness)	
F1030/7M	7	9/32	M	
F1030/9M	9	23/64	M	
F1030/10M	10	25/64	M	
F1030/12M	12	15/32	M	